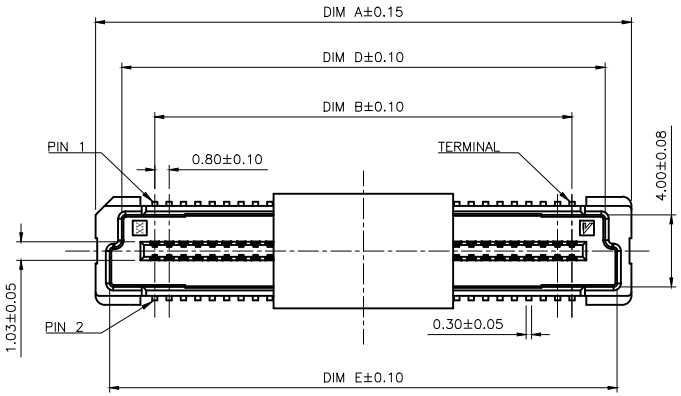

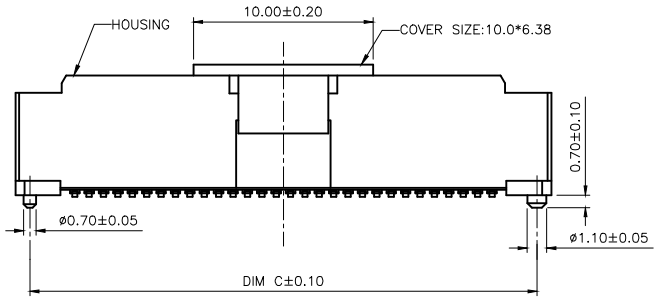

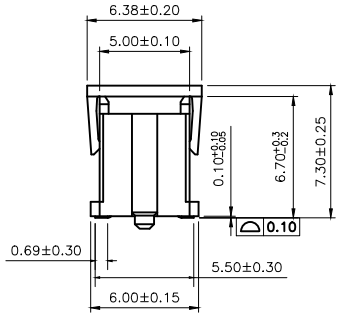

NOTES:
1. MATERIAL:
   1.1 HOUSING: THERMOPLASTIC, HIGH TEMP. LCP UL94V-0.COLOR:BLACK
   1.2 CONTACT: PHOSPHER BRONZE C5191-H.
   1.3 COVER: THERMOPLASTIC LCP, COLOR:NATURE
2. FINISH:
   2.1 CONTACT:
   50~100u" NICKEL UNDERPLATING OVERALL.
   1: GOLD FLASH ON CONTACT AND 80u"MIN MATTE TIN PLATING ON SOLDER
   G: 8u" MIN GOLD ON CONTACT AND 80u"MIN MATTE TIN PLATING ON SOLDER
   C: 15u" MIN GOLD ON CONTACT AND 80u"MIN MATTE TIN PLATING ON SOLDER
3. REFLOW SOLDER CAPABLE TO 260°C PER ACES SPEC.
4. SPEC.PLS REFER TO PS-51155-XXXXX-XXX
5. PART NUMBER

51155-XXX X X-XXX

CKTS

PACKING
7:TAPE REEL& WITH COVER

PLATING
1:GOLD FLASH ON CONTACT(LEAD FREE)
G:8u" MIN GOLD ON CONTACT(LEAD FREE)
C:15u" MIN GOLD ON CONTACT(LEAD FREE)

XXX	Material&Color	Packing
001	LCP&BLACK	51155-XXXCR-00
002	LCP&NATURAL	51155-XXXCR-00

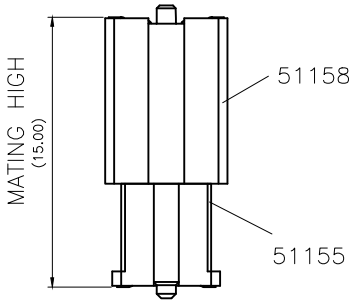

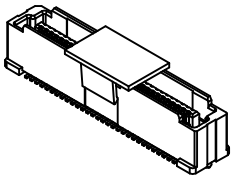

CKT	DIM A	DIM B	DIM C	DIM D	DIM E
20	13.80	7.20	12.20	10.88	12.23
30	17.80	11.20	16.20	14.88	16.23
40	21.80	15.20	20.20	18.88	20.23
60	29.80	23.20	28.20	26.88	28.23
80	37.80	31.20	36.20	34.88	36.23
100	45.80	39.20	44.20	42.88	44.23

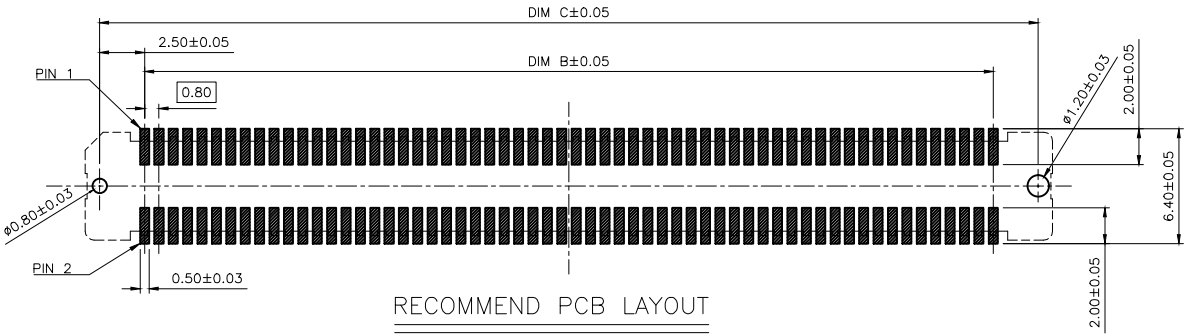

RECOMMEND PCB LAYOUT

TOLERENCE±0.05mm

QUALITY SYMBOLS	DRAWN BY	DATE	ACES ELECTRONICS		
MAJOR	HUYANG	21'/12/20			
CRITICAL	CHECKED BY	DATE			
GENERAL TOLERANCES (UNLESS SPECIFIED)	BRAVE	21'/12/20	TITLE 0.8 mm PITCH BTB PLUG CONN. SMT D/R S/T TYPE		
X. ±0.5	APPROVED BY	DATE			
.X ±0.25	BRAVE	21'/12/20			
.XX ±0.15	UNITS mm		SIZE A4	RFQ NO.	2011002
.XXX ±0.1	SCALE 1 : 1	SHEET NO. 1 OF 2	REV D	DWG NO.	51155-XXXXX-XXX
ANGLES ±2°					

NOTES:
1. MATERIAL:
   1.1 HOUSING: THERMOPLASTIC, HIGH TEMP. LCP UL94V-0.COLOR:BLACK
   1.2 CONTACT: PHOSPHER BRONZE C5191-H.
   1.3 COVER: THERMOPLASTIC LCP, COLOR:NATURE
2. FINISH:
   2.1 CONTACT:
   50~100u" NICKEL UNDERPLATING OVERALL.
   1: GOLD FLASH ON CONTACT AND 80u"MIN MATTE TIN PLATING ON SOLDER
   G: 8u" MIN GOLD ON CONTACT AND 80u"MIN MATTE TIN PLATING ON SOLDER
   C: 15u" MIN GOLD ON CONTACT AND 80u"MIN MATTE TIN PLATING ON SOLDER
3. REFLOW SOLDER CAPABLE TO 260°C PER ACES SPEC.
4. SPEC.PLS REFER TO PS-51155-XXXXX-XXX
5. PART NUMBER

51155-XXX X X-XXX

CKTS

PLATING
1:GOLD FLASH ON CONTACT(LEAD FREE)
G:8u" MIN GOLD ON CONTACT(LEAD FREE)
C:15u" MIN GOLD ON CONTACT(LEAD FREE)

PACKING
7:TAPE REEL& WITH COVER

XXX	Material&Color	Packing
001	LCP&BLACK	51155-XXXCR-00
002	LCP&NATURAL	51155-XXXCR-00

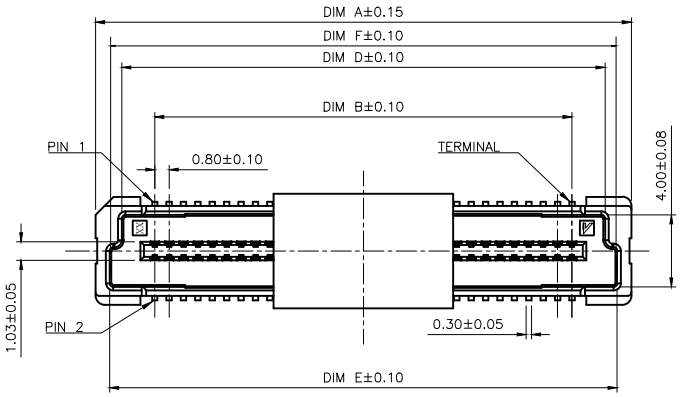

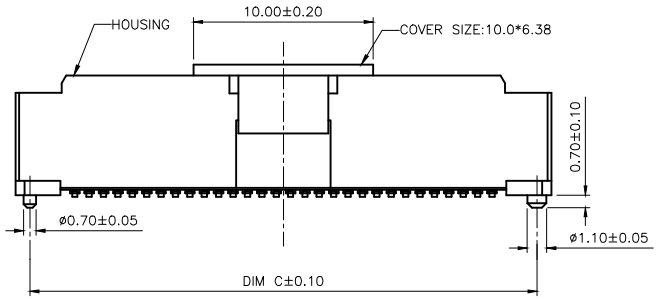

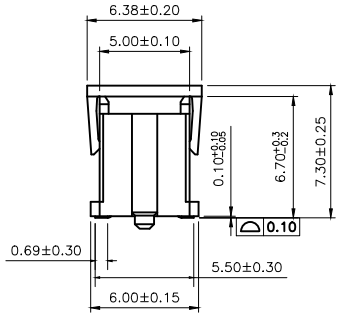

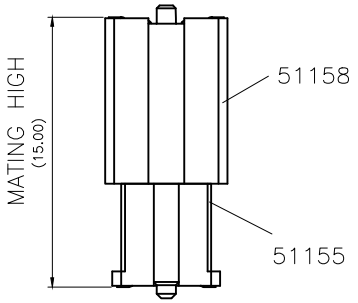

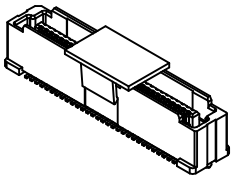

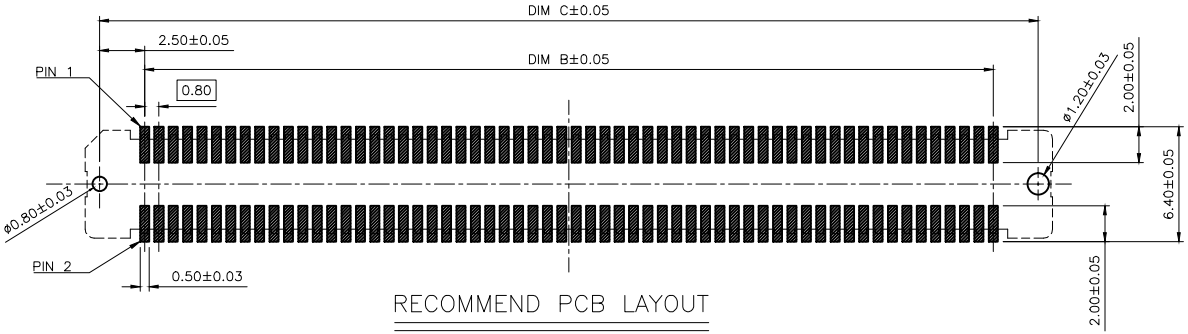

RECOMMEND PCB LAYOUT

TOLERENCE±0.05mm

CKT	DIM A	DIM B	DIM C	DIM D	DIM E	DIM F
120	53.80	47.20	52.20	50.88	52.23	52.11

QUALITY SYMBOLS
MAJOR
CRITICAL

GENERAL TOLERANCES
(UNLESS SPECIFIED)
X. ±0.5
.X ±0.25
.XX ±0.15
.XXX ±0.1
ANGLES ±2°

DRAWN BY HUYANG	DATE 21'/12/20	ACES ELECTRONICS
CHECKED BY BRAVE	DATE 21'/12/20	TITLE 0.8 mm PITCH BTB PLUG CONN. SMT D/R S/T TYPE
APPROVED BY BRAVE	DATE 21'/12/20	
UNITS mm		SIZE A4 / RFQ NO. 2011002
SCALE 1 : 1	SHEET NO. 2 OF 2	REV D / DWG NO. 51155-XXXXX-XXX